Technical data for vacuum cast coil dry-type transformers
Quality built upon more than 30 years of experience



Ecodesign Standard

The new EN 50588-1 requirements set a mandatory minimum efficiency level for transformers introduced into European market. This new European Standard has been issued in order to conform to requirements of commission Regulation No 548/2014, which implement Ecodesign Directive 2009/125/EC of the European Parliament with regard to Ecodesign requirements for small, medium and large power transformers.

ABB Basic dry-type transformers meet the EN 50588-1 requirements and are available both in Tier 1 and Tier 2. These transformers are tested and certified in a ISO17025 acredited laboratory for full compliance with European Standards.

Why choosing dry-type

- Reduced environmental contamination
- Zero risk of leakage of flammable or contaminating substances
- Environmentally friendly production
- Well suited to dump and contaminated areas
- Non flammable and self-extinguishing
- High resistance to short circuit
- High capability to withstand overloads
- High performance when dealing with seismic phenomenon
- Capable of withstanding the most severe rolling and vibrating conditions

ABB Basic dry-type transformers Ecodesign efficiency Tier 1

Voltage class 12 kV, efficiency class according to Ecodesign Tier 1

Power [kVA]	u_K [%]	P_0 [W]	P_k at 120°C [W]	Loss level	L_{WA} [(dB(A)]	Length [mm] IP00/IP31	Width [mm] IP00/IP31	Height [mm] IP00/IP31	Total weight [kg] IP00/IP31	Roller distance [mm]
250	4	520	3,800	A_0B_K	57	1,310 / 1,840	670 / 1,330	1,435 / 1,800	1,180 / 1,350	520
400	4	750	5,500	A_0B_K	60	1,400 / 1,840	755 / 1,330	1,465 / 1,800	1,635 / 1,805	670
630	6	1,100	7,600	A_0B_K	62	1,520 / 1,840	765 / 1,330	1,605 / 1,800	1,865 / 2,035	670
800	6	1,300	8,000	A_0A_K	64	1,520 / 2,015	775 / 1,370	1,845 / 2,105	2,020 / 2,230	670
1,000	6	1,550	9,000	A_0A_K	65	1,700 / 2,015	790 / 1,370	1,905 / 2,105	2,985 / 3,190	670
1,250	6	1,800	11,000	A_0A_K	67	1,700 / 2,160	800 / 1,450	2,080 / 2,630	3,105 / 3,415	670
1,600	6	2,200	13,000	A_0A_K	68	1,860 / 2,160	980 / 1,450	2,190 / 2,630	4,310 / 4,620	820
2,000	6	2,600	16,000	A_0A_K	70	1,900 / 2,450	980 / 1,600	2,410 / 2,980	4,645 / 5,020	820
2,500	6	3,100	19,000	A_0A_K	71	2,040 / 2,450	1,230 / 1,600	2,460 / 2,980	5,685 / 6,060	1,070
3,150	6	3,800	22,000	A_0A_K	74	2,260 / 2,450	1,230 / 1,600	2,865 / 2,980	7,795 / 8,170	1,070

Other requirements upon request.

Voltage class 24 kV, efficiency class according to Ecodesign Tier 1

Power [kVA]	u_K [%]	P_0 [W]	P_k at 120°C [W]	Loss level	L_{WA} [(dB(A)]	Length [mm] IP00/IP31	Width [mm] IP00/IP31	Height [mm] IP00/IP31	Total weight [kg] IP00/IP31	Roller distance [mm]
250	6	520	3,800	A_0B_K	57	1,390 / 1,840	745 / 1,330	1,530 / 1,800	1,250 / 1,420	520
400	6	750	5,500	A_0B_K	60	1,545 / 2,015	830 / 1,370	1,565 / 2,105	1,680 / 1,890	670
630	6	1,100	7,600	A_0B_K	62	1,580 / 2,015	825 / 1,370	1,760 / 2,015	1,900 / 2,110	670
800	6	1,300	8,000	A_0A_K	64	1,750 / 2,160	860 / 1,450	2,020 / 2,630	3,130 / 3,440	670
1,000	6	1,550	9,000	A_0A_K	65	1,790 / 2,160	875 / 1,450	2,010 / 2,630	3,140 / 3,450	670
1,250	6	1,800	11,000	A_0A_K	67	1,850 / 2,160	880 / 1,450	2,250 / 2,630	3,520 / 3,830	670
1,600	6	2,200	13,000	A_0A_K	68	1,900 / 2,160	1,000 / 1,450	2,370 / 2,630	4,255 / 4,565	820
2,000	6	2,600	16,000	A_0A_K	71	1,990 / 2,450	1,230 / 1,600	2,540 / 2,980	5,490 / 5,870	1,070
2,500	6	3,100	19,000	A_0A_K	71	2,140 / 2,450	1,230 / 1,600	2,570 / 2,980	6,600 / 6,980	1,070
3,150	6	3,800	22,000	A_0A_K	74	2,310 / 2,600	1,230 / 1,640	2,945 / 3,095	8,200 / 8,610	1,070

Other requirements upon request.

Voltage class 36 kV, efficiency class according to Ecodesign Tier 1

Power [kVA]	u_K [%]	P_0 [W]	P_k at 120°C [W]	Loss level	L_{WA} [(dB(A)]	Length [mm] IP00/IP31	Width [mm] IP00/IP31	Height [mm] IP00/IP31	Total weight [kg] IP00/IP31	Roller distance [mm]
250	6	598	4,180	A_0B_K	67	1,470 / 1,840	840 / 1,330	1,620 / 1,800	1,525 / 1,700	520
400	6	862	6,050	A_0B_K	69	1,500 / 2,015	900 / 1,370	1,770 / 2,105	1,735 / 1,940	670
630	6	1,265	8,360	A_0B_K	66	1,620 / 2,015	920 / 1,370	1,960 / 2,105	2,170 / 2,380	670
800	6	1,495	8,800	A_0A_K	64	1,860 / 2,160	965 / 1,450	2,060 / 2,630	3,620 / 3,930	670
1,000	6	1,783	9,900	A_0A_K	65	1,800 / 2,160	950 / 1,450	2,180 / 2,630	3,220 / 3,530	670
1,250	6	2,070	12,100	A_0A_K	67	1,940 / 2,500	980 / 1,750	2,260 / 2,500	4,060 / 4,430	670
1,600	6	2,530	14,300	A_0A_K	68	2,070 / 2,500	1,110 / 1,750	2,340/ 2,500	5,190 / 5,560	820
2,000	6	2,990	17,600	A_0A_K	72	2,100 / 2,600	1,115 / 1,640	2,380 / 3,095	5,500 / 5,910	820
2,500	6	3,565	20,900	A_0A_K	73	2,220 / 2,840	1,270 / 1,870	2,690 / 3,080	6,900 / 7,355	1,070
3,150	6	4,370	24,200	A_0A_K	76	2,490 / 2,840	1,305 /1,870	2,950 / 3,080	9,560 / 10,015	1,070

Other requirements upon request.

ABB Basic IP00 dry-type transformer drawing

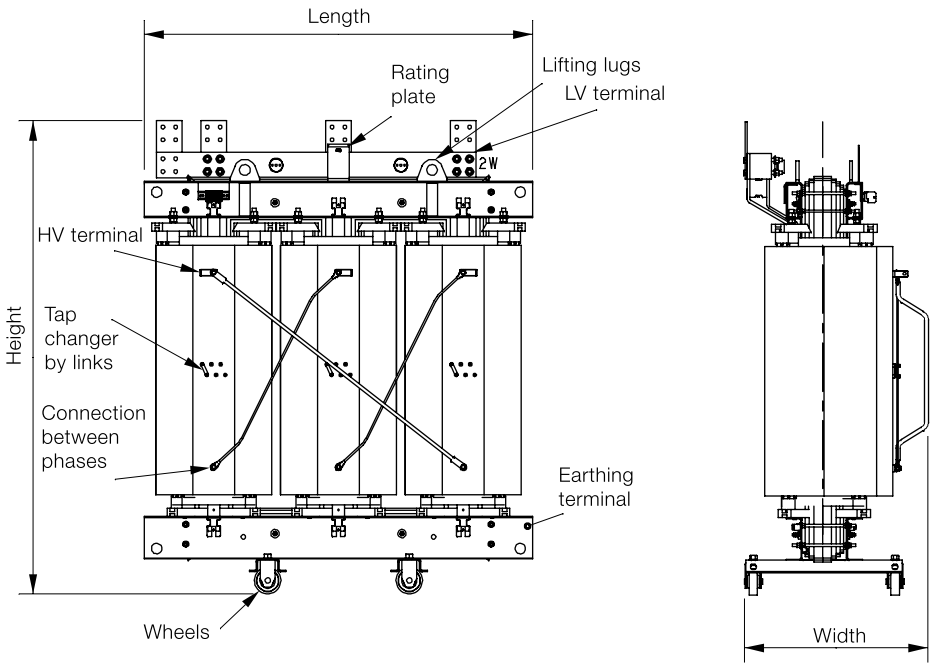

ABB Basic IP21-33 dry-type transformer drawing

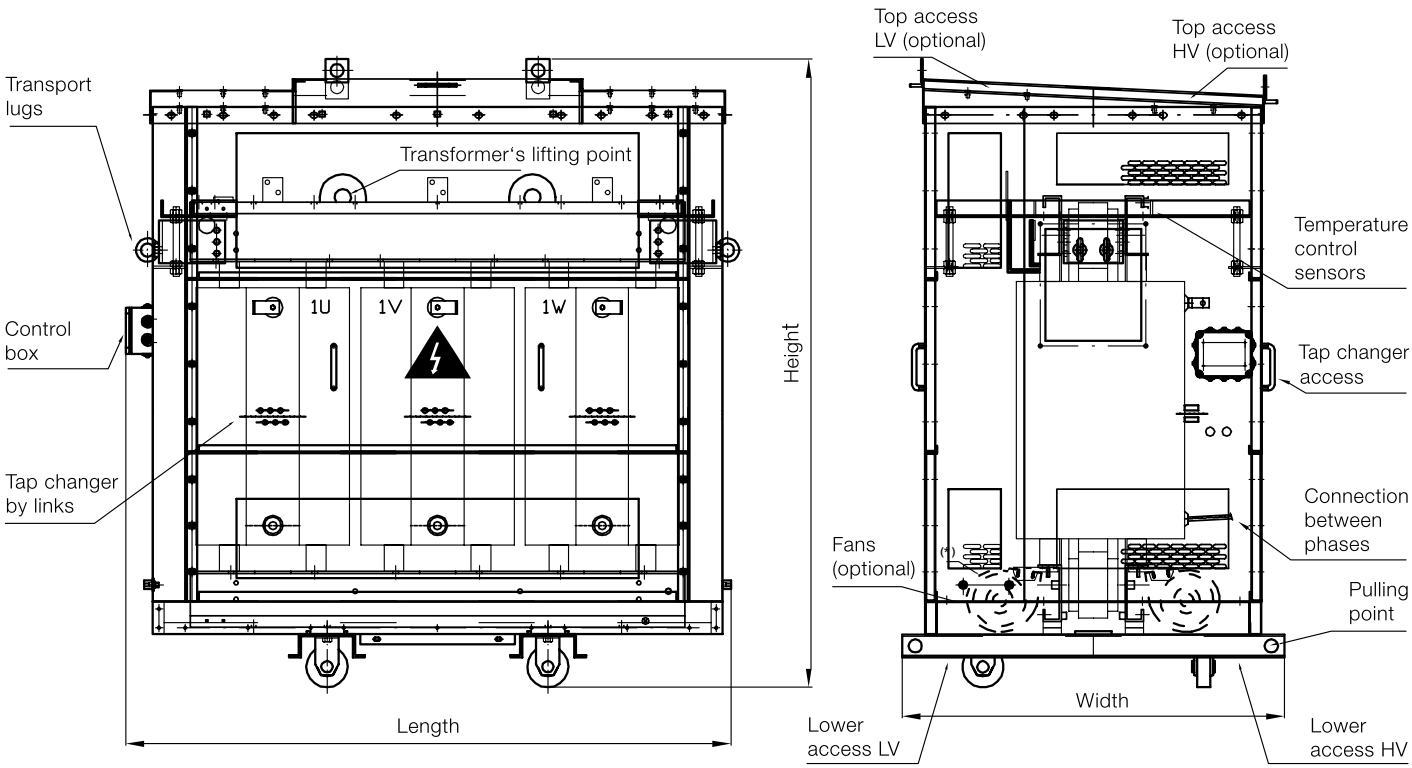

For more information please contact:

Asea Brown Boveri, S.A.
Carretera de Madrid, km. 314
50012 Zaragoza, Spain
Contact center: +34 901 760 762

ABB Management Service Ltd.
Affolternstrasse, 44
P.O. Box 8131
8050 Zurich, Switzerland

www.abb.es

www.abb.com/transformers

Note:
We reserve the right to make technical changes or modify the contents of this document without prior notice. With regard to purchase orders, the agreed particulars shall prevail. ABB does not accept any responsibility whatsoever for potential errors or possible lack of information in this document.

We reserve all rights in this document and in the subject matter and illustrations contained therein. Any reproduction, disclosure to third parties or utilization of its contents – in whole or in parts – is forbidden without prior written consent of ABB.

Copyright© 2016 ABB
All rights reserved.

ER-0046/1995

GA-2010/0434

1LES100021 - ZD 1st edition-Printed in Spain (6.16-en)

Power and productivity
for a better world™