# Three Phase Oil Immersed Distribution Transformers







ELCO INDUSTRIES (1975) LTD.

Three Phase Oil Immersed Distribution Transformers





# Contents


Introduction ..... 2

General construction features ..... 2, 3

Transformer Types:

❒ 50-1600 kVA, 22/0.4 kV - Type 022 MLW ..... 4-9

❒ 100-630 kVA, 33/0.4 kV - Type 033 MLW ..... 10, 11

❒ 800-1600 kVA, 22/0.4 kV - Type 022 IT ..... 12-14

❒ 250, 400, 630, 1250 kVA, 6.3/0.4 kV - Type 6.3 MLW ..... 15-17

Tests ..... 18

Information required with enquiry ..... 18

Bases ..... 19

Low voltage bushing terminals & installation ..... 20

Throat flanges for low voltage terminals ..... 22

Overload duration ..... 22

Indoor installation ..... 23

Accessories & terminals ..... 24, 25

ELCO's transformer plant, one of the most modern in the world, is situated in the industrial zone of Ramat Hasharon, on a 70000 sq.m. area.
The design, production and testing facilities of this plant enabled it to supply in the last 40 years, over 35000 distribution and 500 power transformers of outstanding quality and high reliability. Most of them equipped the entire local electrical network, and some thousands were exported to other countries in North and South America, Africa, Asia and U.S.A.
The high performances of ELCO's transformers are due to the intense activity of the R&D team, formed by well known experts, to the exclusive use of the best raw materials and accessories, and to the modern production facilities, partially self-designed and built.
The automatic transfer line for the processing of the grain oriented steel sheets into transformer laminations, the automatic line for cutting, bending, shaping and welding of the transformer walls, the special winding machines for foil and wire coils, the drying under vacuum and oil impregnation equipment, are only some of the production facilities which ensure the low level of the losses, the excellent insulation properties and the long operating life of ELCO's transformers.
Comprehensive testing is considered as an integral part of all stages of the manufacturing process. Control tests of raw materials, components, sub-assemblies and processes are performed according to the strictest quality assurance procedures.
The sophisticated testing facilities which include equipment for impulse testing up to 2.4 million volts, enable the HV laboratory to perform all final type and routine tests.

## *General construction features of the distribution transformers*

The standard ELCO transformers are designed and built to fulfil the requirements of relevant IEC standards. For special customer requirements, ELCO is able to design, manufacture and test transformers according to any other standards.

**CORE.** The vertical core construction of ELCO's transformers ensures low-reluctance flux paths and allows efficient cooling of the active part of the transformers. Cores are built of low loss grain oriented steel laminations of iron-silicon alloy, covered with a very thin layer of insulation which protects the core from cross-core current flow and minimizes the eddy current loss. The boltless interleaved core construction with stepped cross section, and a very careful slitting, deburring and stress-relief by using of precise automatic cutting machines, minimizes distortion and strains, reducing the core losses and the noise level.

**WINDINGS.** Layer windings with round or rectangular electrolytic copper wire with rounded edges are used for the H.V. coils, copper foil or rectangular wire for the L.V. coils.
Conductors are enameled or covered with several layers of cable paper. The tappings are always symmetrically arranged in the middle of the coil, or divided in two groups, to lower the short circuit stresses.

**TANK.** Tanks of distribution transformers are made of corrugated steel plate, the number and depth of the fins being calculated to ensure the cooling of the transformer oil by its natural circulation. Tank and cover are bolted oil-tight using nitril rubber gaskets. The tank is fitted with an U- base, with skids or with four orientable wheels. For untanking, only the cover bolts require removing; no internal connections have to be loosened. A tank ground pad is provided on the longitudinal tank side. The tank is designed to withstand internal pressure of minimum 5 PSI (0.35 at). Therefore the setting of the pressure relief device is for 4 PSI (0.3 at).
All the steel surfaces of the tank, cover and conservator are cleaned by sand blasting and painted with 3 coats of painting, the total thickness-of the paint being around 100 microns.

**OIL.** As cooling liquid, either transformer oil or silicone fluid is used. The silicone fluid is a less flammable, self-extinguishing and non-toxic fluid approved for use indoors without additional fire protection measures.
As oil preservation system, most of ELCO's transformers are provided with expansion tanks (conservators). These allow the expansion of the oil under variations in ambient temperature and load. Contact between the oil in the conservator and the external athmosphere is via a silica gel breather, therefore the oil comes in contact only with dry air. ELCO manufactures as well sealed transformers (without conservator) in which the contact between oil and air is totally avoided.

The sealed transformer tanks are fitted with larger fins if the elasticity of the tank must be increased. Sealed transformers can be fitted with a general supervising device (DGPT) for oil level, temperature, gas emission and pressure increase.

**DRYING.** Distribution transformers are subjected to a heat and vacuum drying treatment. The active part is heated by a flow of hot air in a special furnace and, after reaching the required temperature, is subjected to a high vacuum process for several hours. At the end of this stage, the transformer is filled under vacuum with oil, previously filtered, degassed, dehydrated in a double stage column and tested.

**OUTGOINGS.** Porcelain bushings, plug-in terminals or cable boxes may be used for leading out the winding ends. The porcelain bushings and the plug-in terminals may be located on the cover or on the side walls. Bushings of 33 kV and up are usually fitted with spark gaps.

**TAP CHANGER.** Distribution transformers are fitted with off circuit tap changers. Their contacts are located under the cover and the operating handle is located on the cover.

# 50 - 1600 kVA - Type 022 MLW
## L o w - L o s s T y p e

## Technical data

### General data

Rated primary voltage : 22 kV

Tapping range : ±5% (up to 630 kVA)

±2X2.5% (800 - 1600 kVA)

Rated secondary voltage : 0.4/0.231 kV

Rated Frequency : 50 Hz

Connection group : Dyn 11

Insulating voltage level

Power frequency : 50 kV

Lightning impulse (BIL) : 125 kV

Cooling : Oil natural - Air Natural (ONAN)

Oil temperature rise : 60°C

Winding temperature rise : 65°C

Tolerances and testing acc. to I.E.C. 76

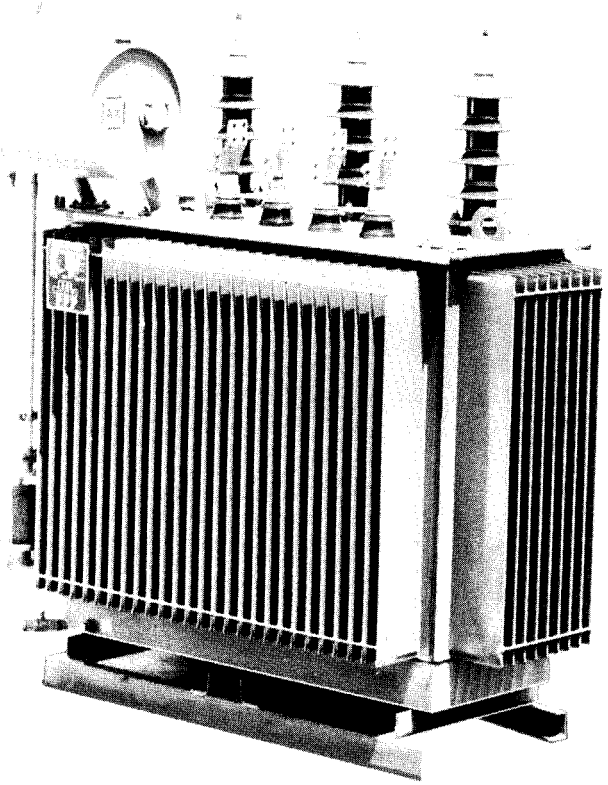

### Electrical data

| Rating kVA | LOSSES - kW | | Sh.C. impedance % | Er % | Ex % | Efficiency at full load | | Regulation at full load | | Io % | Sound level at 1m dB (A) | Inrush current on H.V. side with/without residual magnetism |
|---|---|---|---|---|---|---|---|---|---|---|---|---|
| | No-Load | Load at 75°C | | | | at cosØ=1 % | at cosØ=0.8 % | at cosØ=1 % | at cosØ=0.8 % | | | |
| 50 | 0.165 | 0.98 | 4.7 | 1.96 | 4.272 | 97.76 | 97.22 | 2.051 | 4.156 | 2.1 | 45 | 13.5/7 In |
| 100 | 0.23 | 1.76 | 4.4 | 1.76 | 4.033 | 98.05 | 97.57 | 1.841 | 3.851 | 1.7 | 46 | 13/6.5 In |
| 160 | 0.30 | 2.33 | 4.4 | 1.456 | 4.152 | 98.38 | 97.99 | 1.542 | 3.686 | 1.5 | 47 | 12/6 In |
| 250 | 0.45 | 3.33 | 4.4 | 1.332 | 4.194 | 98.51 | 98.15 | 1.420 | 3.614 | 1.3 | 48 | 12.5/6.1 In |
| 400 | 0.645 | 4.67 | 4.4 | 1.168 | 4.242 | 98.69 | 98.37 | 1.257 | 3.516 | 1.2 | 50 | 12/6 In |
| 630 | 0.90 | 5.46 | 4.4 | 0.867 | 4.314 | 99.00 | 98.75 | 0.960 | 3.325 | 1.0 | 52 | 12/6 In |
| 800 | 1.20 | 8.50 | 5 | 1.063 | 4.886 | 98.80 | 98.51 | 1.182 | 3.835 | 0.9 | 54 | 11.5/6.5 In |
| 1000 | 1.35 | 10.30 | 5 | 1.03 | 4.893 | 98.85 | 98.57 | 1.15 | 3.814 | 0.8 | 54 | 11.5/6.5 In |
| 1250 | 1.50 | 11.30 | 5 | 0.904 | 4.918 | 98.99 | 98.74 | 1.025 | 3.731 | 0.7 | 56 | 11/6 In |
| 1250 | 1.50 | 11.30 | 6 | 0.904 | 5.932 | 98.99 | 98.74 | 1.08 | 4.37 | 0.7 | 56 | 11/6 In |
| 1600 | 1.70 | 14.70 | 6 | 0.919 | 5.929 | 98.99 | 98.74 | 1.095 | 4.38 | 0.6 | 56 | 9/5 In |

On request :

*(1) All other technical data*

*(2) Transformers tested to other standards*

*(3) Silicone fluid insulation*

# Conservator Type 022 MLW

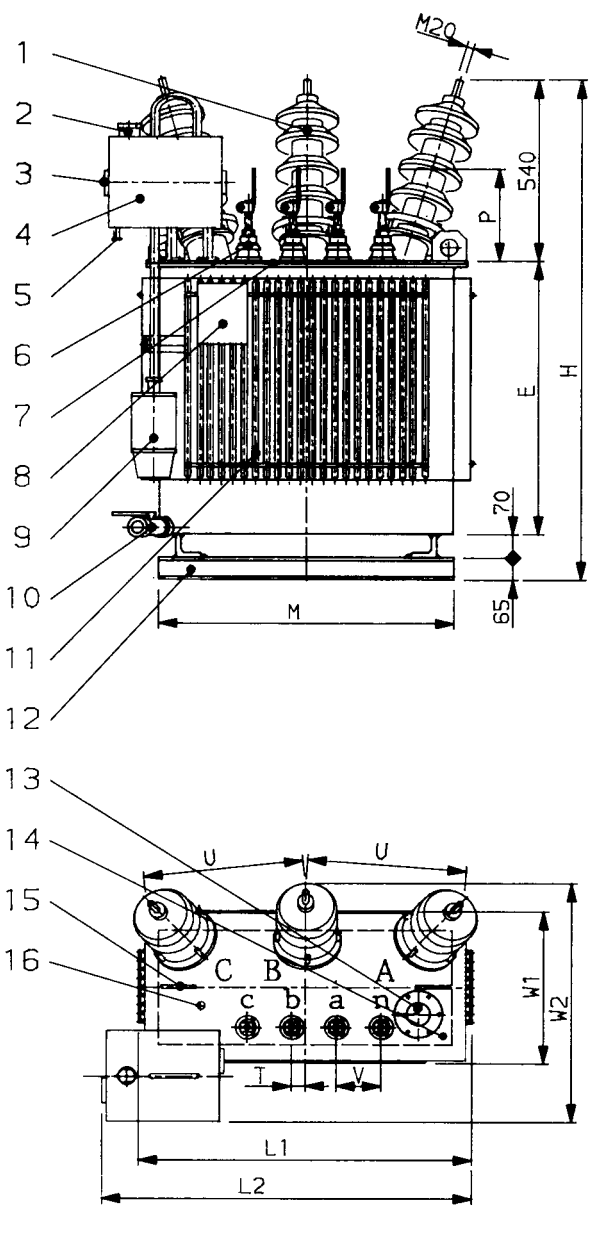


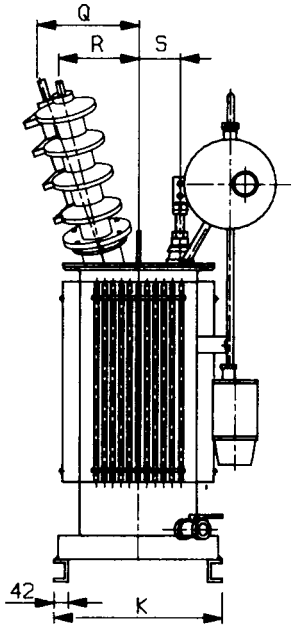


1. H.V. BUSHING*
2. OIL FILLING OPENING
3. OIL LEVEL INDICATOR
4. EXPANSION VESSEL
5. OIL SAMPLING VALVE
6. L.V. BUSHING
7. COVER
8. RATING PLATE
9. SILICA GEL BREATHER
10. 1" DRAIN VALVE
11. TANK
12. BASE
13. SAFETY VALVE
14. TAP CHANGER
15. LIFTING LUG
16. THERMOMETER POCKET

** Plug-in bushings can be installed on request*

## Dimensions and weights

| Rated power kVA | L1 | L2 | W1 | W2 | H | E | K | M | P | Q | R | S | U | T | V | Oil weight kg | Total weight kg |
|---|---|---|---|---|---|---|---|---|---|---|---|---|---|---|---|---|---|
| **50** | 940 | 1020 | 440 | 680 | 1375 | 700 | 450 | 860 | 253 | 300 | 200 | 115 | 430 | 0 | 120 | 140 | 540 |
| **100** | 970 | 1100* | 460 | 710 | 1485 | 810 | 490 | 860 | 253 | 300 | 240 | 120 | 465 | 40 | 130 | 170 | 700 |

** L2 includes the distance to the A phase bushing*

# Conservator Type 022 MLW

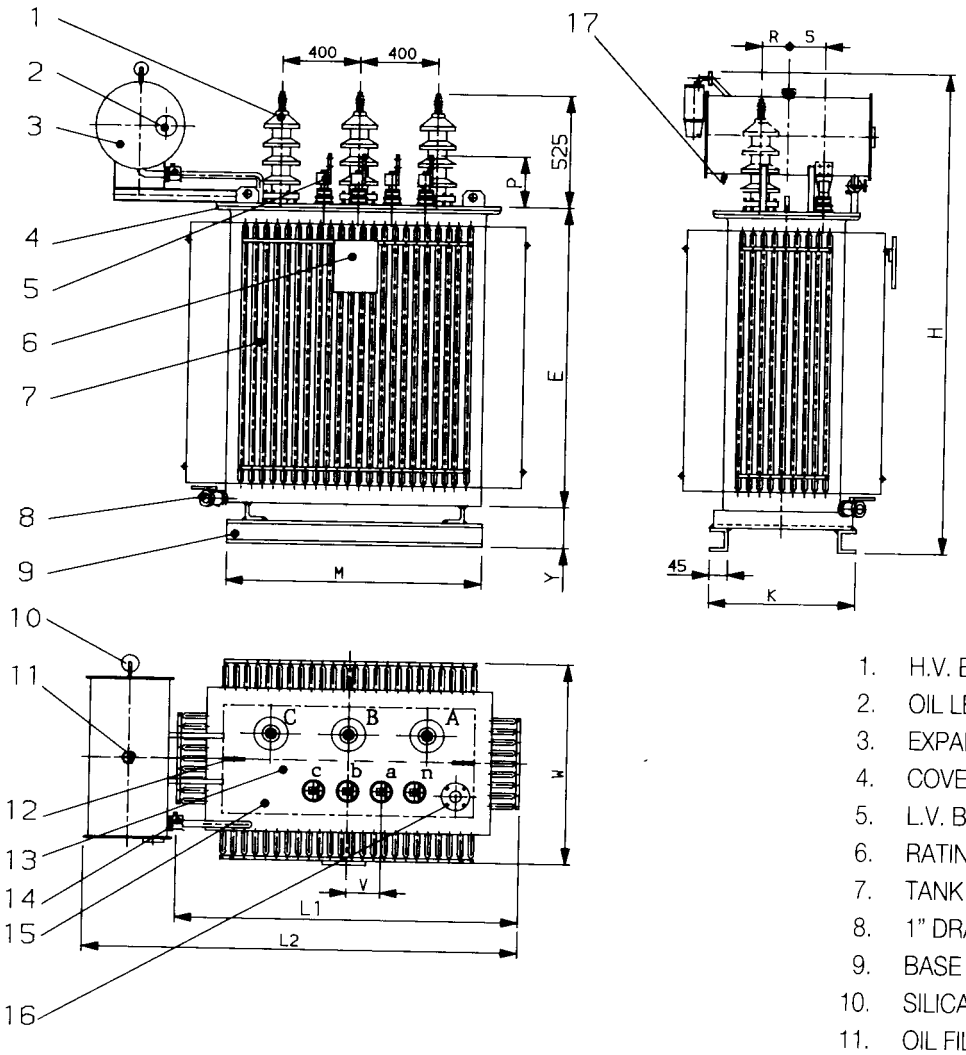


1. H.V. BUSHING
2. OIL LEVEL INDICATOR
3. EXPANSION VESSEL
4. COVER
5. L.V. BUSHING
6. RATING PLATE
7. TANK
8. 1" DRAIN VALVE
9. BASE
10. SILICA GEL BREATHER
11. OIL FILLING OPENING
12. LIFTING LUG
13. TAP CHANGER
14. BUCHHOLZ RELAY
15. THERMOMETER POCKET
16. SAFETY VALVE
17. OIL SAMPLING VALVE

** Plug-in bushings can be installed on request*

## Dimensions and weights

| Rated power kVA | L1 | L2 | W | H | E | K | M | Y | P | R | S | V | Oil weight kg | Total weight kg |
|---|---|---|---|---|---|---|---|---|---|---|---|---|---|---|
| **800** | 1820 | 2080 | 1010 | 2220 | 1340 | 660 | 1300 | 160 | 345 | 175 | 175 | 175 | 790 | 3400 |
| **1000** | 1940 | 2150 | 1120 | 2240 | 1360 | 660 | 1300 | 160 | 345 | 180 | 180 | 175 | 920 | 4000 |
| **1250** | 1890 | 2150 | 1070 | 2330 | 1450 | 660 | 1300 | 160 | 380 | 190 | 180 | 180 | 820 | 4000 |
| **1600** | 2130 | 2340 | 1190 | 2250 | 1390 | 1120* | 2100* | 140* | 380 | 215 | 190 | 180 | 950 | 5050 |

** Skid base*

# Sealed Type 022 MLW

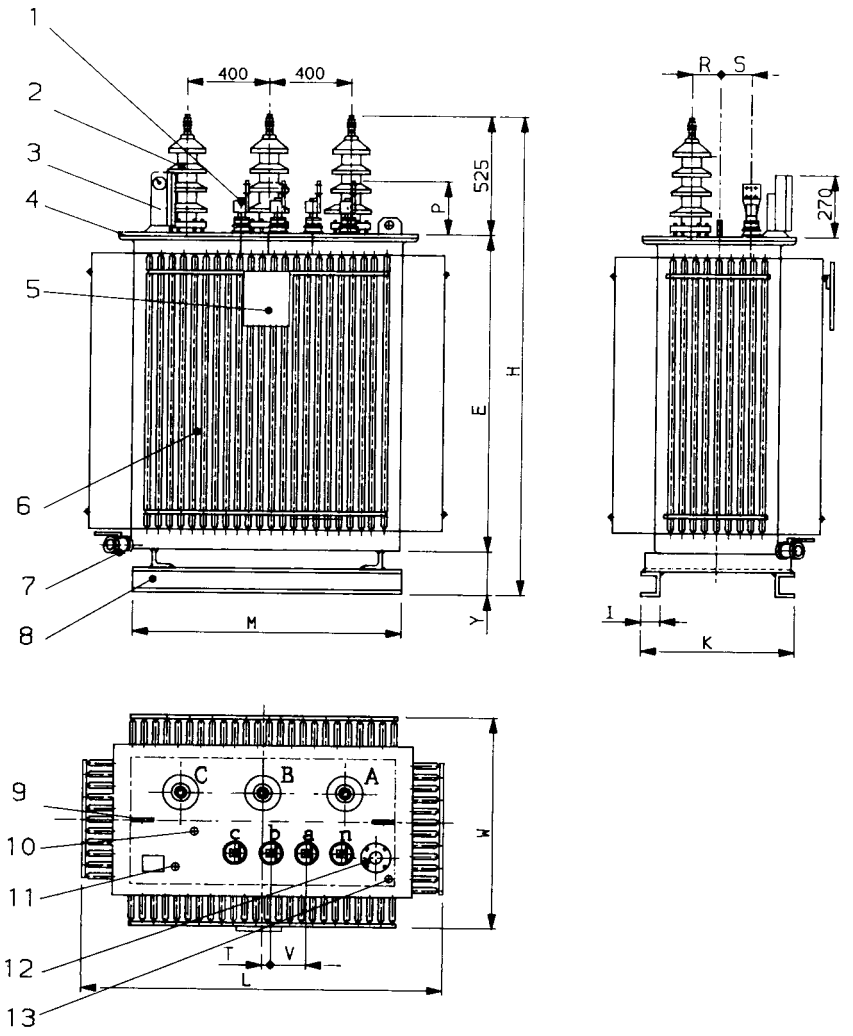


1. L.V. BUSHING
2. H.V. BUSHING*
3. DGPT
4. COVER
5. RATING PLATE
6. TANK
7. 1" DRAIN VALVE
8. BASE
9. LIFTING LUG
10. TAP CHANGER
11. THERMOMETER POCKET
12. SAFETY VALVE
13. OIL FILLING OPENING

** Plug-in bushings can be installed on request*

## Dimensions and weights

| Rated power kVA | L | W | H | E | K | M | Y | I | P | R | S | T | V | Oil weight kg | Total weight kg |
|---|---|---|---|---|---|---|---|---|---|---|---|---|---|---|---|
| **250** | 1480 | 870 | 1600 | 940 | 545 | 1060 | 135 | 42 | 253 | 130 | 145 | 0 | 140 | 330 | 1400 |
| **400** | 1590 | 910 | 1670 | 995 | 545 | 1180 | 150 | 45 | 250 | 150 | 160 | 50 | 140 | 400 | 1800 |
| **630** | 1710 | 950 | 1810 | 1135 | 580 | 1260 | 150 | 45 | 275 | 160 | 170 | 30 | 160 | 520 | 2500 |
| **800** | 1820 | 1010 | 2025 | 1340 | 660 | 1300 | 160 | 45 | 345 | 175 | 175 | 0 | 175 | 790 | 3400 |
| **1000** | 1940 | 1120 | 2045 | 1360 | 660 | 1300 | 160 | 45 | 345 | 180 | 180 | 0 | 175 | 920 | 4000 |
| **1250** | 1890 | 1070 | 2135 | 1450 | 660 | 1300 | 160 | 45 | 380 | 190 | 180 | 0 | 180 | 820 | 4000 |
| **1600** | 2130 | 1190 | 2055 | 1390 | 1120* | 2100* | 140* | - | 380 | 215 | 190 | 0 | 180 | 950 | 5000 |

** Skid base*

# Sealed Type with plug-in bushings 022 MLW

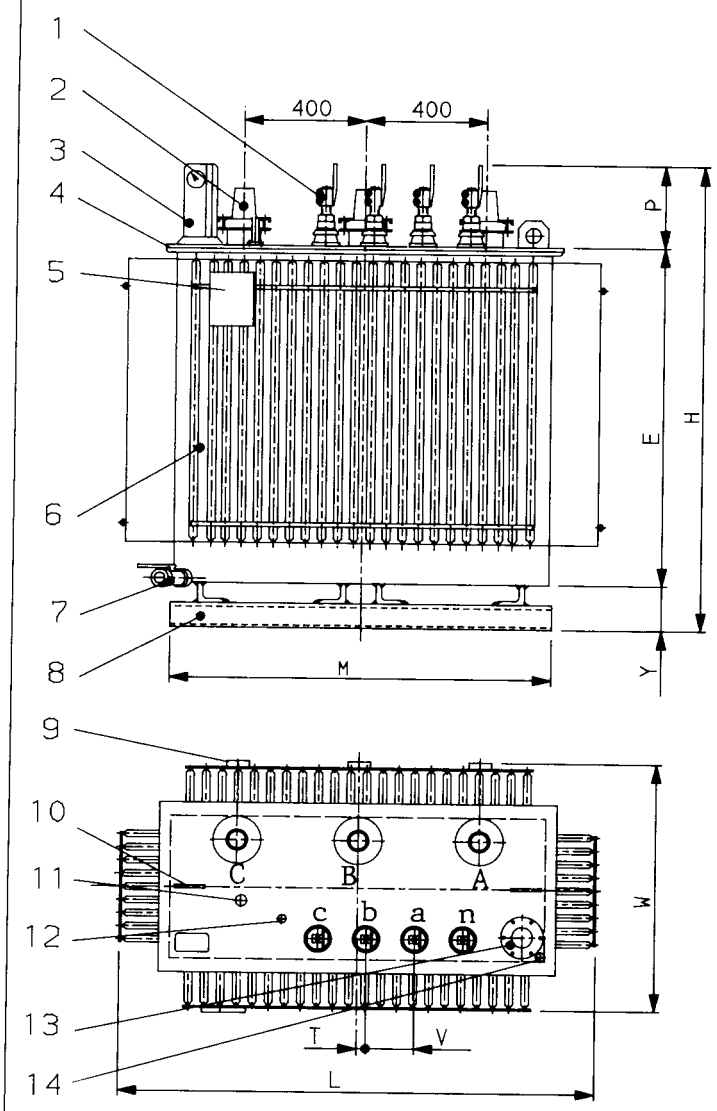


1. L.V. BUSHING
2. H.V. PLUG-IN BUSHING
3. DGPT
4. COVER
5. RATING PLATE
6. TANK
7. 1" DRAIN VALVE
8. BASE
9. PARKING STAND
10. LIFTING LUG
11. TAP CHANGER
12. THERMOMETER POCKET
13. SAFETY VALVE
14. OIL FILLING OPENING

## Dimensions and weights

| Rated power kVA | L | W | H | E | K | M | Y | I | P | R | S | T | V | Oil weight kg | Total weight kg |
|---|---|---|---|---|---|---|---|---|---|---|---|---|---|---|---|
| **250** | 1480 | 900 | 1345 | 940 | 545 | 1060 | 135 | 42 | 253 | 130 | 145 | 0 | 140 | 330 | 1400 |
| **400** | 1590 | 940 | 1415 | 995 | 545 | 1180 | 150 | 45 | 250 | 150 | 160 | 50 | 140 | 400 | 1800 |
| **630** | 1710 | 980 | 1560 | 1135 | 580 | 1260 | 150 | 45 | 275 | 160 | 170 | 30 | 160 | 520 | 2500 |
| **800** | 1820 | 1040 | 1845 | 1340 | 660 | 1300 | 160 | 45 | 345 | 175 | 175 | 0 | 175 | 790 | 3400 |
| **1000** | 1940 | 1150 | 1865 | 1360 | 660 | 1300 | 160 | 45 | 345 | 180 | 180 | 0 | 175 | 920 | 4000 |
| **1250** | 1890 | 1100 | 1990 | 1450 | 660 | 1300 | 160 | 45 | 380 | 190 | 180 | 0 | 180 | 820 | 4000 |
| **1600** | 2130 | 1220 | 1910 | 1390 | 1120* | 2100* | 140* | - | 380 | 215 | 190 | 0 | 180 | 950 | 5000 |

* *Skid base*

# 100 - 630 kVA - Type 033 MLW
## L o w - L o s s T y p e

## Technical data

### General data

Rated primary voltage : 33 kV

Tapping range : ±5%

Rated secondary voltage : 0.4/0.231 kV

Rated Frequency : 50 Hz

Connection group : Dyn 11

Insulating voltage level

Power frequency : 70 kV

Lightning impulse (BIL) : 170 kV

Cooling : Oil natural - Air Natural (ONAN)

Oil temperature rise : 60°C

Winding temperature rise : 65°C

Tolerances and testing acc. to I.E.C. 76

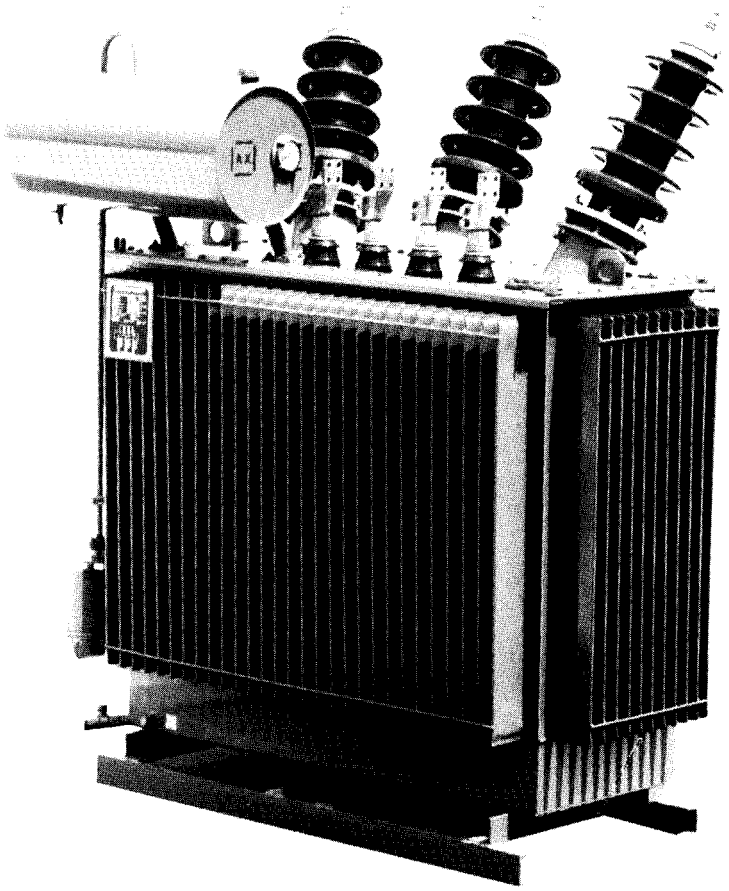

### Electrical data

| Rating kVA | LOSSES - kW | | Sh.C. impedance % | Er % | Ex % | Efficiency at full load | | Regulation at full load | | Io % | Sound level at 1m dB (A) | Inrush current on H.V. side with/without residual magnetism |
|---|---|---|---|---|---|---|---|---|---|---|---|---|
| | No-Load | Load $_{75°C}^{at}$ | | | | at cosØ=1 % | at cosØ=0.8 % | at cosØ=1 % | at cosØ=0.8 % | | | |
| 100 | 0.23 | 1.7 | 4.4 | 1.7 | 4.058 | 98.11 | 97.64 | 1.782 | 3.820 | 1.7 | 46 | 12.5/4.5 In |
| 160 | 0.30 | 2.47 | 4.4 | 1.544 | 4.12 | 98.30 | 97.88 | 1.629 | 3.735 | 1.5 | 47 | 12.5/4.5 In |
| 250 | 0.44 | 3.41 | 4.4 | 1.364 | 4.183 | 98.48 | 98.11 | 1.451 | 3.633 | 1.3 | 48 | 12.5/4.5 In |
| 400 | 0.65 | 4.83 | 4.4 | 1.208 | 4.231 | 98.65 | 98.32 | 1.297 | 3.540 | 1.2 | 50 | 12/5 In |
| 630 | 0.95 | 5.78 | 4.4 | 0.917 | 4.303 | 98.94 | 98.68 | 1.010 | 3.358 | 1.0 | 52 | 12/5 In |

On request :

*(1) All other technical data*

*(2) Transformers tested to other standards*

*(3) Silicone fluid insulation*

# Conservator Type 033 MLW

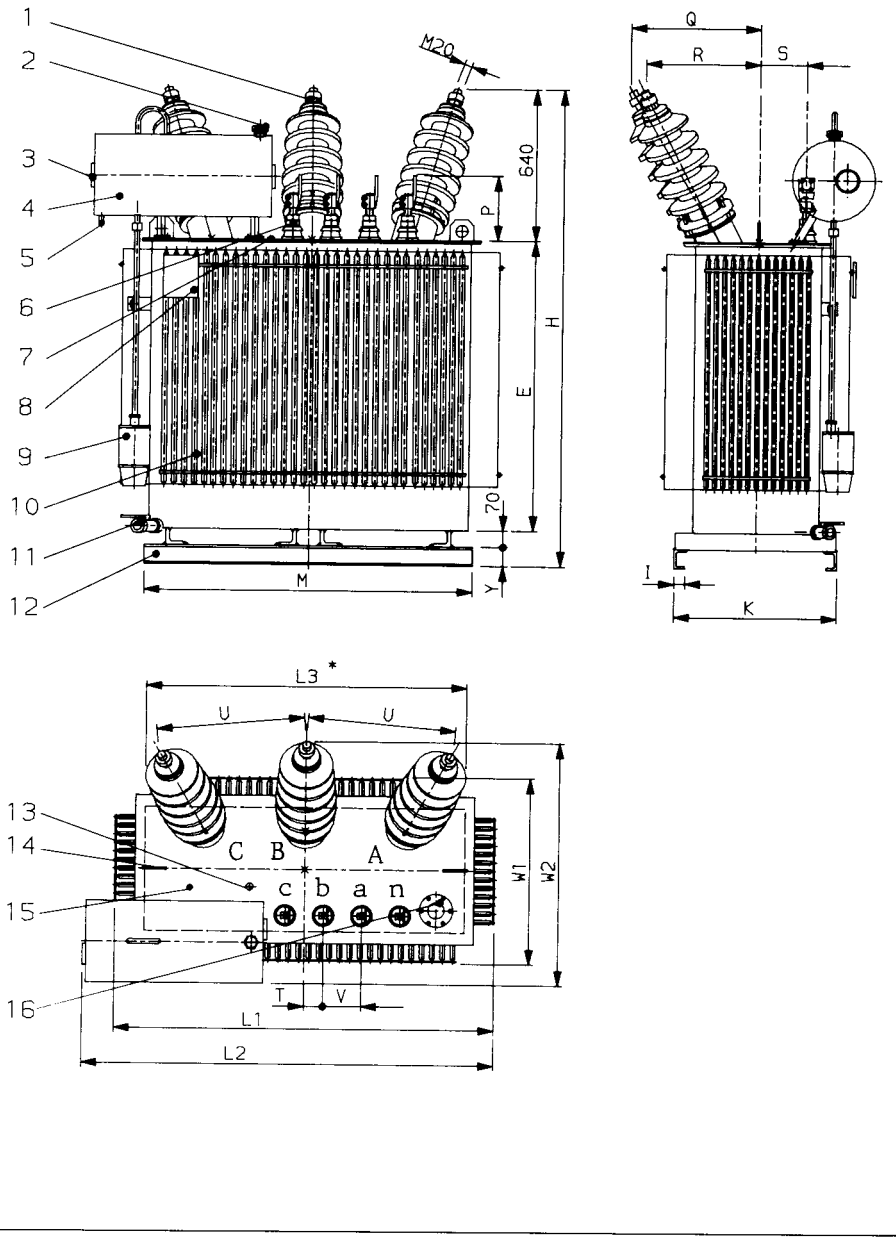


1. H.V. BUSHING
2. OIL FILLING OPENING
3. OIL LEVEL INDICATOR
4. EXPANSION VESSEL
5. OIL SAMPLING VALVE
6. L.V. BUSHING
7. COVER
8. RATING PLATE
9. SILICA GEL BREATHER
10. TANK
11. 1" DRAIN VALVE
12. BASE
13. TAP CHANGER
14. LIFTING LUG
15. THERMOMETER POCKET
16. SAFETY VALVE

## Dimensions and weights

| Rated power kVA | L1 | L2 | W1 | W2 | H | E | K | M | Q | P | R | S | T | U | V | Oil weight kg | Total weight kg |
|---|---|---|---|---|---|---|---|---|---|---|---|---|---|---|---|---|---|
| **100** | 1060 | 1090 | 530 | 950 | 1740 | 965 | 540 | 960 | 490 | 253 | 380 | 150 | 0 | 580 | 120 | 320 | 1150 |
| **160** | 1200 | 1210 | 560 | 1000 | 1800 | 1010 | 600 | 1150 | 510 | 253 | 400 | 165 | 65 | 630 | 130 | 360 | 1450 |
| **250** | 1240 | 1280 | 570 | 1000 | 1850 | 1060 | 640 | 1250 | 510 | 253 | 400 | 170 | 70 | 630 | 140 | 400 | 1700 |
| **400** | 1400 | 1450 | 700 | 1010 | 1950 | 1160 | 640 | 1250 | 520 | 250 | 470 | 175 | 70 | 610 | 140 | 490 | 2130 |
| **630** | 1600 | 1730 | 780 | 1040 | 2030 | 1240 | 680 | 1370 | 550 | 275 | 500 | 195 | 80 | 610 | 160 | 650 | 3000 |

* *100 kVA , L3=1220mm*
*160 kVA, L3=1240mm*

# Conservator Type 033 MLW

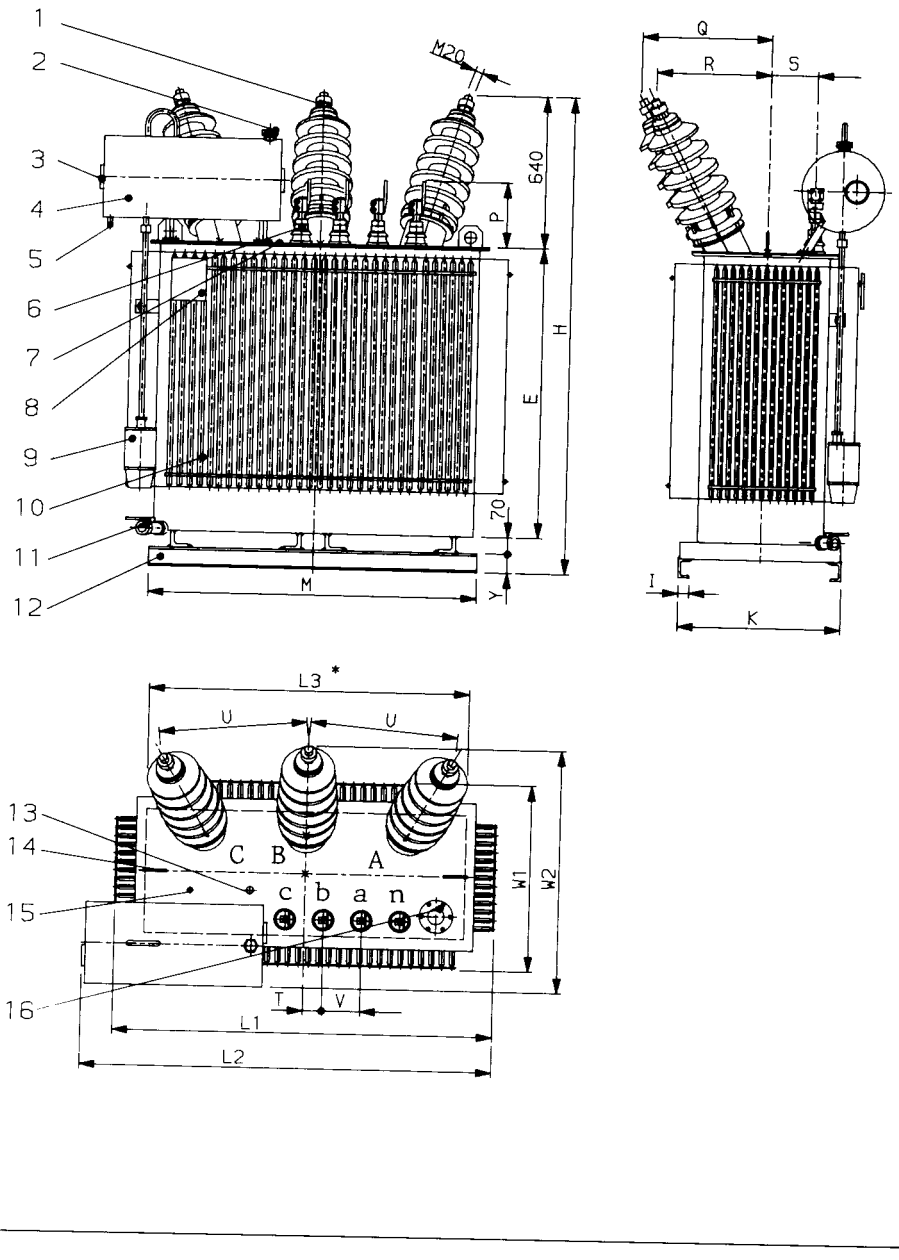


1. H.V. BUSHING
2. OIL FILLING OPENING
3. OIL LEVEL INDICATOR
4. EXPANSION VESSEL
5. OIL SAMPLING VALVE
6. L.V. BUSHING
7. COVER
8. RATING PLATE
9. SILICA GEL BREATHER
10. TANK
11. 1" DRAIN VALVE
12. BASE
13. TAP CHANGER
14. LIFTING LUG
15. THERMOMETER POCKET
16. SAFETY VALVE

## Dimensions and weights

| Rated power kVA | L1 | L2 | W1 | W2 | H | E | K | M | Q | P | R | S | T | U | V | Oil weight kg | Total weight kg |
|---|---|---|---|---|---|---|---|---|---|---|---|---|---|---|---|---|---|
| **100** | 1060 | 1090 | 530 | 950 | 1740 | 965 | 540 | 960 | 490 | 253 | 380 | 150 | 0 | 580 | 120 | 320 | 1150 |
| **160** | 1200 | 1210 | 560 | 1000 | 1800 | 1010 | 600 | 1150 | 510 | 253 | 400 | 165 | 65 | 630 | 130 | 360 | 1450 |
| **250** | 1240 | 1280 | 570 | 1000 | 1850 | 1060 | 640 | 1250 | 510 | 253 | 400 | 170 | 70 | 630 | 140 | 400 | 1700 |
| **400** | 1400 | 1450 | 700 | 1010 | 1950 | 1160 | 640 | 1250 | 520 | 250 | 470 | 175 | 70 | 610 | 140 | 490 | 2130 |
| **630** | 1600 | 1730 | 780 | 1040 | 2030 | 1240 | 680 | 1370 | 550 | 275 | 500 | 195 | 80 | 610 | 160 | 650 | 3000 |

* *100 kVA , L3=1220mm*
*160 kVA, L3=1240mm*

# 800-1600 kVA - Type 022 IT

## Industrial Type

## Technical data

### General data

Rated primary voltage : 22 kV

Tapping range : ±2x2.5%

Rated secondary voltage : 0.4/0.231 kV

Rated Frequency : 50 Hz

Connection group : Dyn 11

Insulating voltage level

Power frequency : 50 kV

Lightning impulse (BIL) : 125 kV

Cooling : Oil natural - Air Natural (ONAN)

Oil temperature rise : 60°C

Winding temperature rise : 65°C

Tolerances and testing acc. to I.E.C. 76

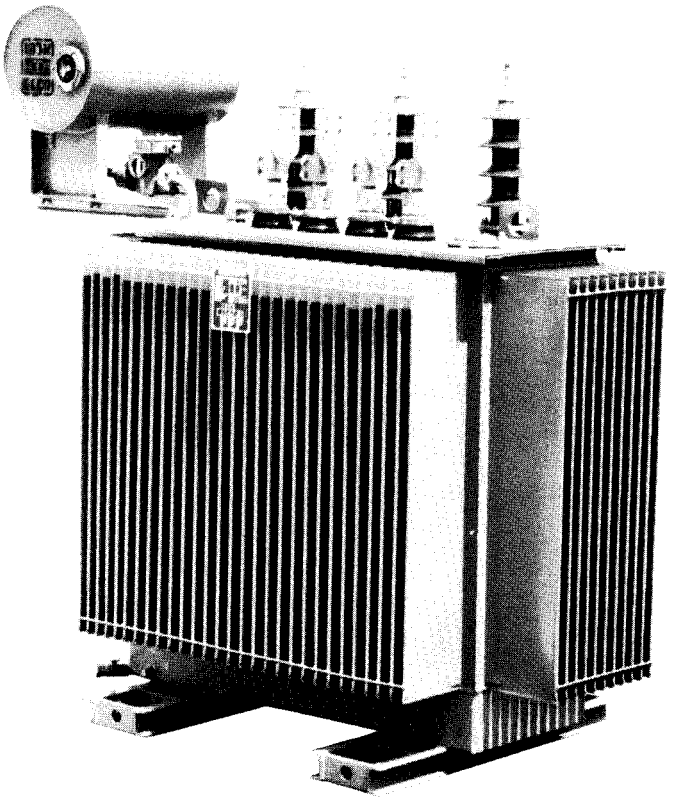

### Electrical data

| Rating kVA | LOSSES - KW | | Sh.C. impedance % | Er % | Ex % | Efficiency at full load | | Regulation at full load | | Io % | Sound level at 1m dB (A) | Inrush current on H.V. side with/without residual magnetism |
|---|---|---|---|---|---|---|---|---|---|---|---|---|
| | No-Load | Load $_{75°C}^{at}$ | | | | at cosØ=1 % | at cosØ=0.8 % | at cosØ=1 % | at cosØ=0.8 % | | | |
| 800 | 1.10 | 10.3 | 6 | 1.288 | 5.86 | 98.59 | 98.25 | 1.459 | 4.623 | 1.0 | 54 | 9/5 In |
| 1000 | 1.20 | 13.0 | 6 | 1.30 | 5.857 | 98.60 | 98.26 | 1.472 | 4.631 | 0.9 | 54 | 9/5 In |
| 1250 | 1.35 | 16.2 | 6 | 1.296 | 5.858 | 98.61 | 98.27 | 1.468 | 4.628 | 0.8 | 56 | 9/5 In |
| 1600 | 1.50 | 19.0 | 6 | 1.188 | 5.881 | 98.73 | 98.42 | 1.360 | 4.558 | 0.7 | 56 | 9/5 In |

On request :

*(1) All other technical data*

*(2) Transformers tested to other standards*

*(3) Silicone fluid insulation*

# Conservator Type 022 IT

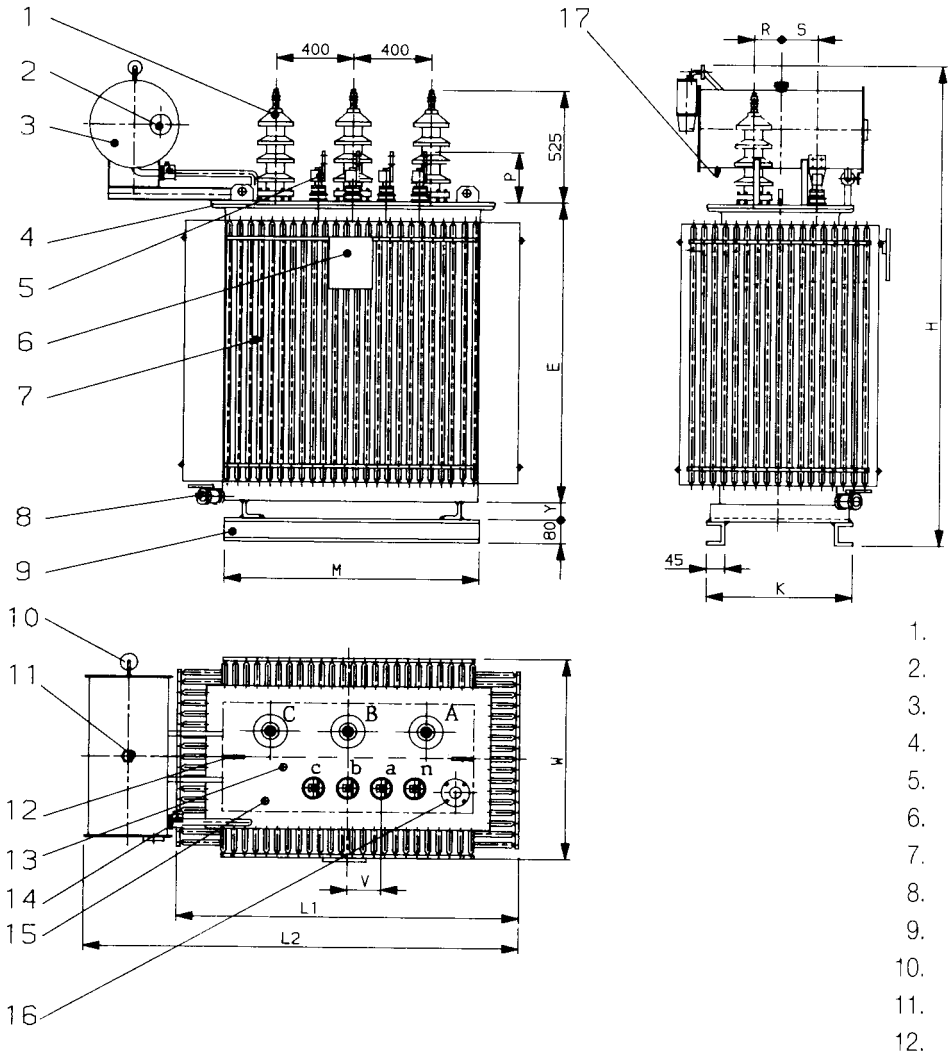


1. H.V. BUSHING*
2. OIL LEVEL INDICATOR
3. EXPANSION VESSEL
4. COVER
5. L.V. BUSHING
6. RATING PLATE
7. TANK
8. 1" DRAIN VALVE
9. BASE
10. SILICA GEL BREATHER
11. OIL FILLING OPENING
12. LIFTING LUG
13. TAP CHANGER
14. BUCHHOLZ RELAY
15. THERMOMETER POCKET
16. SAFETY VALVE
17. OIL SAMPLING VALVE

** Plug-in bushings can be installed on request*

## Dimensions and weights

| Rated power kVA | L1 | L2 | W | H | E | K | M | Y | P | R | S | V | Oil weight kg | Total weight kg |
|---|---|---|---|---|---|---|---|---|---|---|---|---|---|---|
| **800** | 1780 | 2000 | 1000 | 1980 | 1170 | 580 | 1260 | 70 | 345 | 165 | 165 | 175 | 625 | 2800 |
| **1000** | 1820 | 2080 | 1010 | 2220 | 1340 | 660 | 1300 | 80 | 345 | 175 | 175 | 175 | 790 | 3400 |
| **1250** | 1940 | 2150 | 1120 | 2240 | 1360 | 660 | 1300 | 80 | 345 | 180 | 180 | 175 | 920 | 4000 |
| **1600** | 2060 | 2220 | 1230 | 2330 | 1450 | 660 | 1300 | 80 | 380 | 190 | 180 | 180 | 1060 | 4700 |

# Sealed Type 022 IT

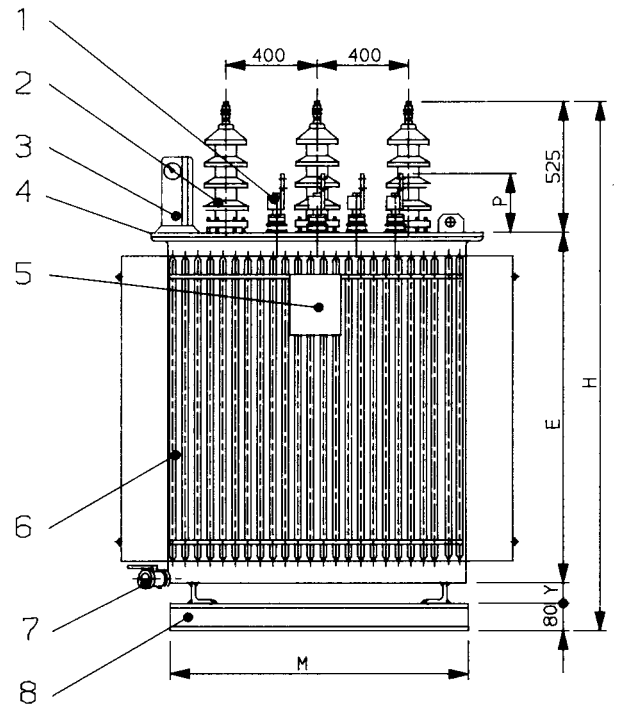


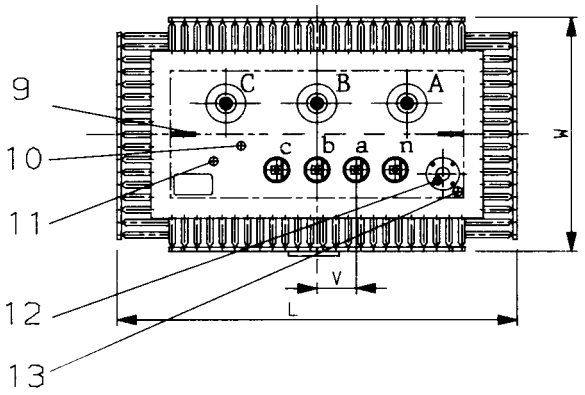


1. L.V. BUSHING
2. H.V. BUSHING*
3. DGPT
4. COVER
5. RATING PLATE
6. TANK
7. 1" DRAIN VALVE
8. BASE
9. LIFTING LUG
10. TAP CHANGER
11. THERMOMETER POCKET
12. SAFETY VALVE
13. OIL FILLING OPENING

** Plug-in bushings can be installed on request*

## Dimensions and weights

| Rated power kVA | L | W | H | E | K | M | Y | P | R | S | V | Oil weight kg | Total weight kg |
|---|---|---|---|---|---|---|---|---|---|---|---|---|---|
| **800** | 1780 | 1000 | 1845 | 1170 | 580 | 1260 | 70 | 345 | 165 | 165 | 175 | 625 | 2800 |
| **1000** | 1820 | 1010 | 2025 | 1340 | 660 | 1300 | 80 | 345 | 175 | 175 | 175 | 790 | 3400 |
| **1250** | 1940 | 1120 | 2045 | 1360 | 660 | 1300 | 80 | 345 | 180 | 180 | 175 | 920 | 4000 |
| **1600** | 2060 | 1230 | 2135 | 1450 | 660 | 1300 | 80 | 380 | 190 | 180 | 180 | 1060 | 4700 |

# 250, 400, 630, 1250 kVA - Type 6.3 MLW
## L o w - L o s s T y p e

## Technical data

### General data

Rated primary voltage : 6.3 kV

Tapping range : ±2x2.5%

Rated secondary voltage : 0.4/0.231 kV

Rated Frequency : 50 Hz

Connection group : Dyn 11

Insulating voltage level

Power frequency : 40 kV

Lightning impulse (BIL) : 60 kV

Cooling : Oil natural - Air Natural (ONAN)

Oil temperature rise : 60°C

Winding temperature rise : 65°C

Tolerances and testing acc. to I.E.C. 76

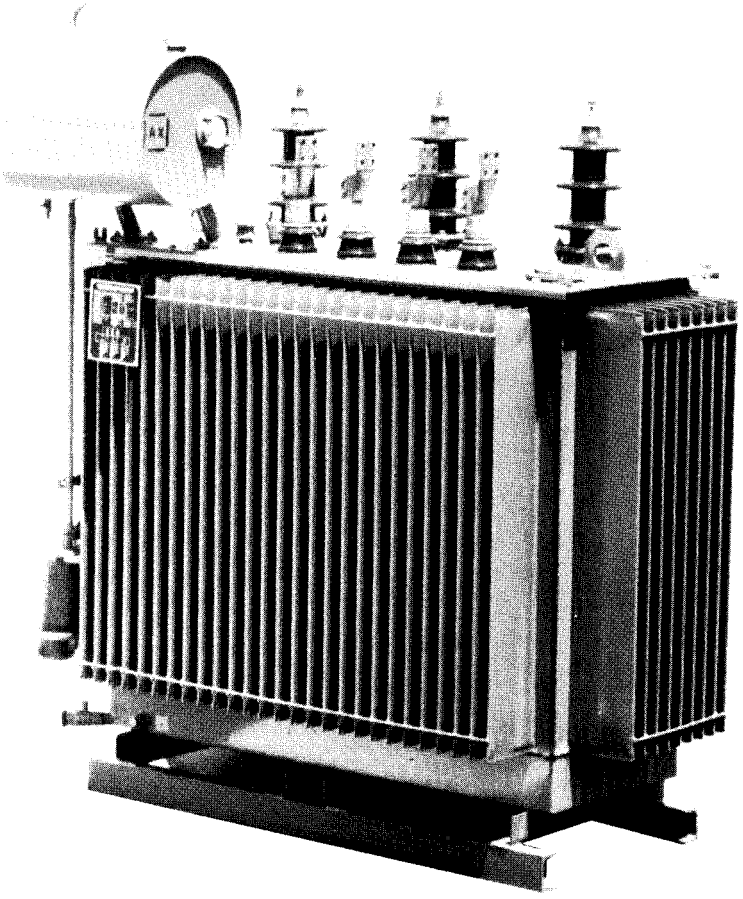

### Electrical data

| Rating kVA | LOSSES - kW | | Sh.C. impedance % | Er % | Ex % | Efficiency at full load | | Regulation at full load | | Io % | Sound level at 1m dB (A) | Inrush current on H.V. side with/without residual magnetism |
|---|---|---|---|---|---|---|---|---|---|---|---|---|
| | No-Load | Load $^{at}_{75\,C}$ | | | | at cosØ=1 % | at cosØ=0.8 % | at cosØ=1 % | at cosØ=0.8 % | | | |
| 250 | 0.45 | 3.33 | 4.4 | 1.332 | 4.194 | 98.51 | 98.15 | 1.420 | 3.614 | 1.3 | 48 | 12.5/6.1 In |
| 400 | 0.645 | 4.67 | 4.4 | 1.168 | 4.242 | 98.69 | 98.37 | 1.257 | 3.516 | 1.2 | 50 | 12/6 In |
| 630 | 0.90 | 5.46 | 4.4 | 0.867 | 4.314 | 99.00 | 98.75 | 0.960 | 3.325 | 1.0 | 52 | 12/6 In |
| 1250 | 1.60 | 10.8 | 6 | 0.864 | 5.937 | 99.02 | 98.78 | 1.04 | 4.343 | 0.7 | 56 | 11/5 In |

On request :

*(1) All other technical data*

*(2) Transformers tested to other standards*

*(3) Silicone fluid insulation*

# Conservator Type 6.3 MLW

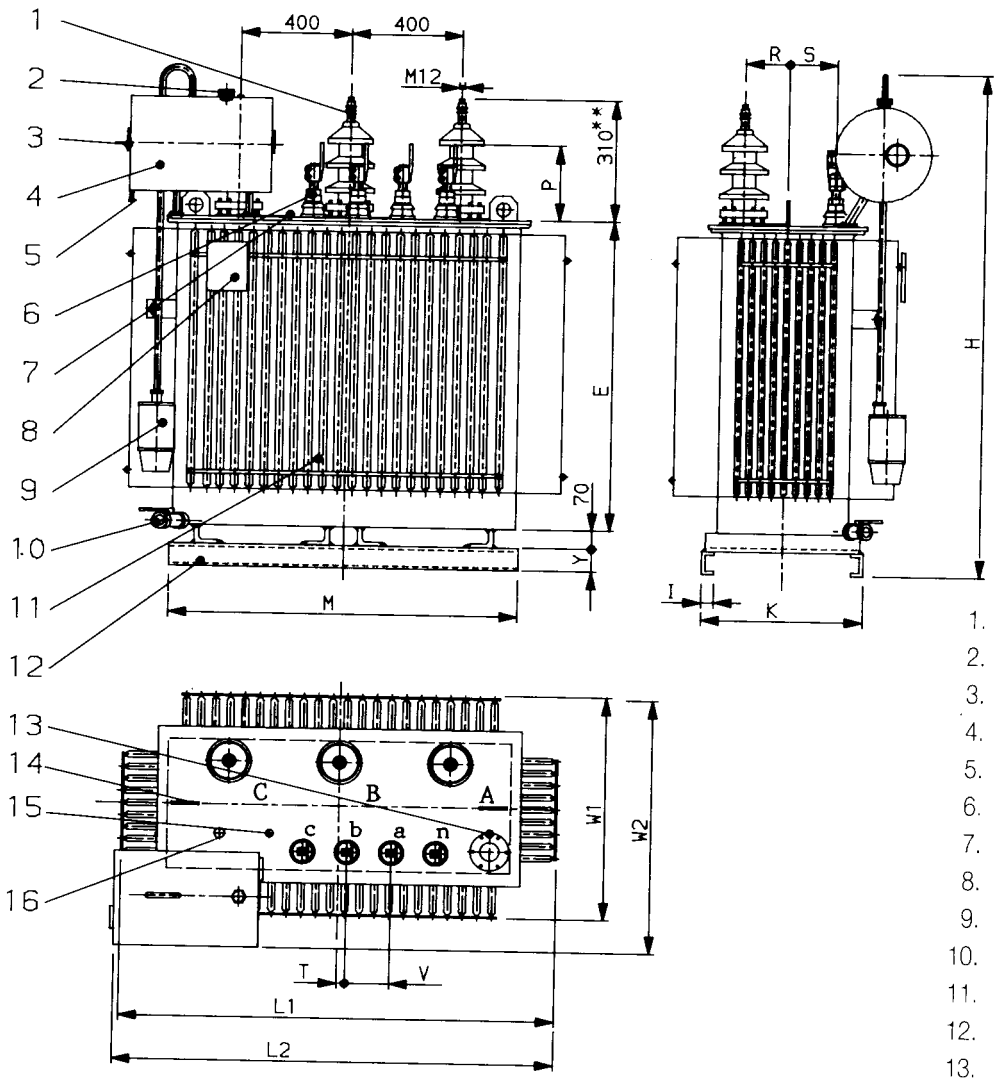


1. H.V. BUSHING*
2. OIL FILLING OPENING
3. OIL LEVEL INDICATOR
4. EXPANSION VESSEL
5. OIL SAMPLING VALVE
6. L.V. BUSHING
7. COVER
8. RATING PLATE
9. SILICA GEL BREATHER
10. 1" DRAIN VALVE
11. TANK
12. BASE
13. SAFETY VALVE
14. LIFTING LUG
15. TAP CHANGER
16. THERMOMETER POCKET

* *Plug-in bushings can be installed on request*

** *For 1250 kVA-345*

## Dimensions and weights

| Rated power kVA | L1 | L2 | W1 | W2 | H | E | K | M | Y | I | P | R | S | T | V | Oil weight kg | Total weight kg |
|---|---|---|---|---|---|---|---|---|---|---|---|---|---|---|---|---|---|
| 250 | 1270 | 1280 | 660 | 760 | 1575 | 940 | 545 | 1060 | 65 | 42 | 253 | 130 | 145 | 0 | 140 | 280 | 1250 |
| 400 | 1470 | 1470 | 790 | 840 | 1645 | 995 | 545 | 1180 | 80 | 45 | 250 | 150 | 160 | 50 | 140 | 370 | 1700 |
| 630 | 1570 | 1535 | 810 | 930 | 1845 | 1135 | 580 | 1260 | 80 | 45 | 275 | 160 | 170 | 30 | 160 | 470 | 2400 |
| 1250 | for 1250 kVA see page 7 | | | | | | | | | | | | | | | | |

# Sealed Type 6.3 MLW

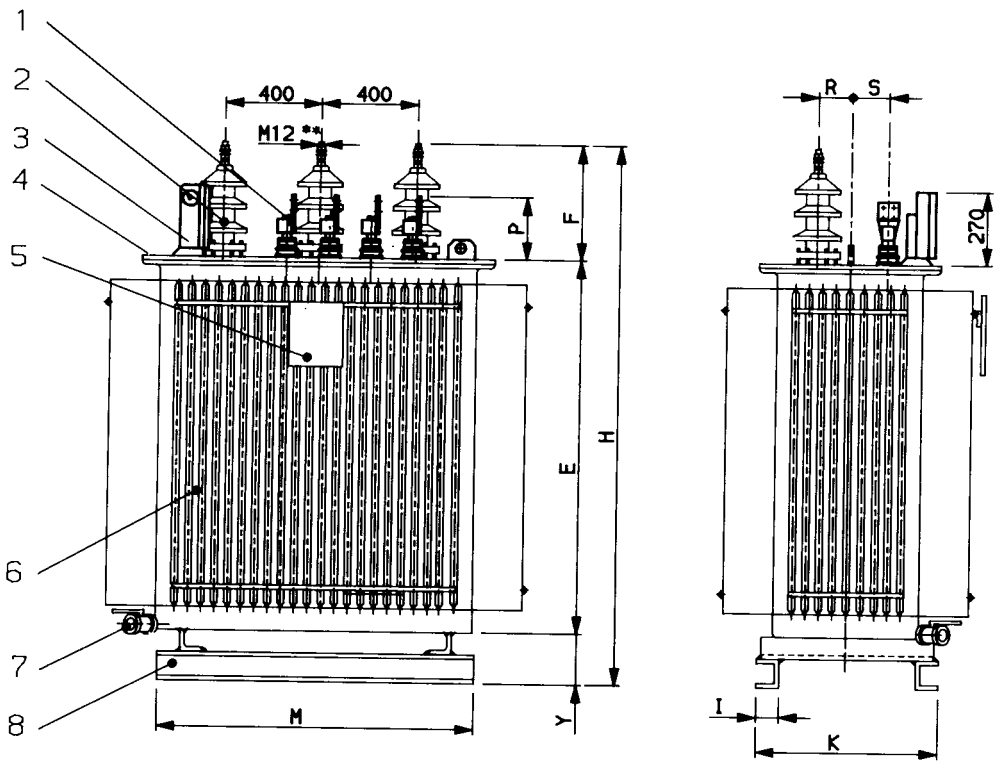


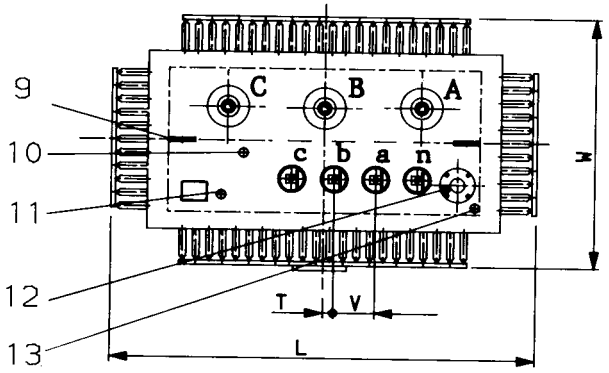


1. L.V. BUSHING
2. H.V. BUSHING*
3. DGPT
4. COVER
5. RATING PLATE
6. TANK
7. 1" DRAIN VALVE
8. BASE
9. LIFTING LUG
10. TAP CHANGER
11. THERMOMETER POCKET
12. SAFETY VALVE
13. OIL FILLING OPENING

* *Plug-in bushings can be installed on request*

** *For 1250 kVA-M20*

## Dimensions and weights

| Rated power kVA | L | W | H | E | K | M | Y | I | P | R | S | T | V | F | Oil weight kg | Total weight kg |
|---|---|---|---|---|---|---|---|---|---|---|---|---|---|---|---|---|
| **250** | 1480 | 870 | 1385 | 940 | 545 | 1060 | 135 | 42 | 253 | 130 | 145 | 0 | 140 | 310 | 330 | 1400 |
| **400** | 1590 | 910 | 1455 | 995 | 545 | 1180 | 150 | 45 | 250 | 150 | 160 | 50 | 140 | 310 | 400 | 1800 |
| **630** | 1710 | 950 | 1595 | 1135 | 580 | 1260 | 150 | 45 | 275 | 160 | 170 | 30 | 160 | 310 | 520 | 2500 |
| **1250** | 1890 | 1070 | 1955 | 1450 | 660 | 1300 | 160 | 45 | 345 | 190 | 180 | 0 | 175 | 345 | 800 | 4000 |

# Tests

### Routine tests

(1) Measurement of winding resistance.
(2) Check of voltage vector relationship.
(3) Measurement of voltage ratio.
(4) Measurement of no - load loss and current.
(5) Measurement of short - circuit impedance and load loss.
(6) Induced overvoltage withstand test.
(7) Separate - source voltage withstand test.
(8) Measurement of insulation resistance.
(9) Measurement of insulation strength of oil sample.

### Type tests

(1) Temperature - rise test.
(2) Lightning impulse test.

### Special test

(1) Measurement of acoustic sound level.

# Information required with enquiry

### The following information should be supplied with the enquiry:

| | |
|---|---|
| Type | _____ MLW / IT |
| Rated Power | _____ kVA |
| High voltage | _____ kV |
| Lightning impulse (BIL) | _____ kV |
| Taps | _____ % |
| Low voltage | _____ kV |
| Frequency | _____ Hz |
| Vector group | _____ |
| Ambient temperature | _____ °C |
| Altitude | _____ m |
| Standards | _____ |
| Impedance voltage | _____ % |
| Rating plate (language, material) | _____ |
| Construction: sealed / with conservator | _____ |
| Oil / silicone fluid | _____ |
| Special requests* | _____ |

* Any other requirement concerning: base, throat flange, painting, accessories, protection equipment, special tests

# Bases

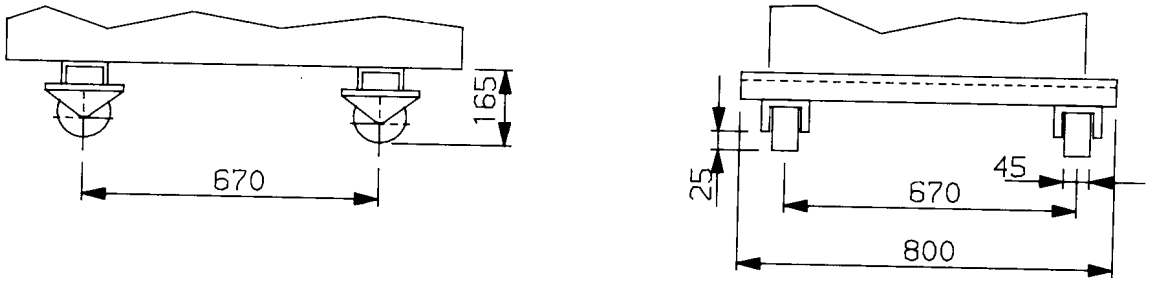


BASE WITH ROLLERS UP TO 630 kVA

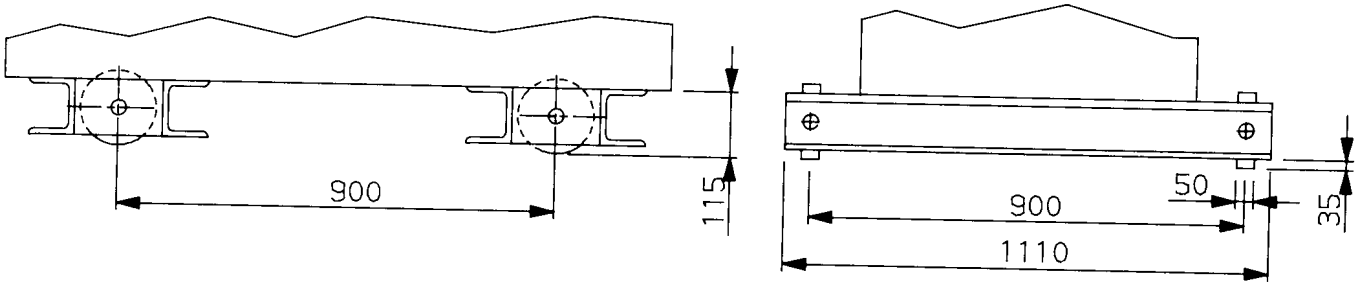


BASE WITH ROLLERS 800-1600 kVA

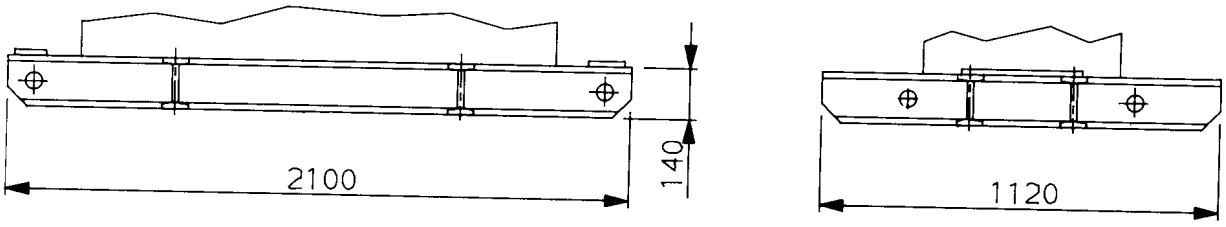


SKID BASE FOR 1600 kVA MLW